Star Trek Axanar Hermes Class VI Scout

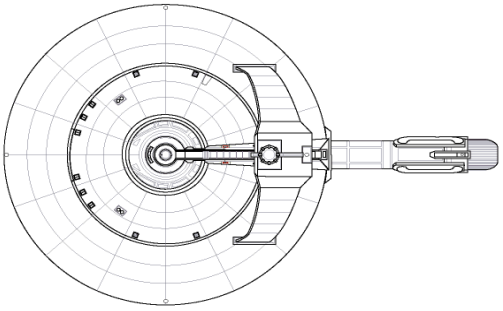

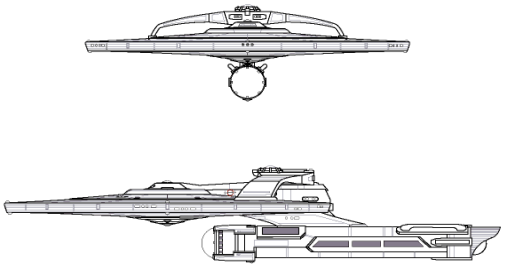

CONSTRUCTION DATA:			
Class:	VI	VII	VI
Model Number:	MK I	MK II	MK III
Date Entering Service	2210	2232	2244
Number Constructed	28	22	18
HULL DATA			
Superstructure:	11	11	11
Damage Chart:	C	C	C
Dimensions:			
Length:	186m	186m	186m
Width:	122m	122m	122m
Height:	36m	36m	36m
Weight:	62375 mt	62550 mt	63858 mt
Cargo Specs			
Total SCU:	100 SCU	100 SCU	110 SCU
Cargo Capacity:	4950 mt	4960 mt	5060 mt
Landing Capacity:	NO	NO	NO
EQUIPMENT DATA			
Computer Type:	L3	L3	L3
Cloaking Device/ECM:	None	None	None
Power to Engage:			
Transporters-			
6-person:	1	1	1
20-person Combat:	0	0	0
22-person Emergency:	1	1	1
Cargo	1	1	1
OTHER DATA			
Crew:	111	112	114
Passengers:	5	5	5
Troops:			
Shuttlecraft-	2	2	2
ENGINE AND POWER -			
Total Power Available:	18	18	19
Movement Point Ratio:	4/1	3/1	3/1
Warp Engine Type:	FWDR-5	FWDR-6	FWDR-6
Number:	1	1	1
Power Units:	15	15	15
Stress Chart:	Q/O	P/O	P/O
Max Safe Cruising Speed:	4	5	5
Emergency Speed:	5	6	6
Impulse Engine Type:	FIMP-3	FIMP-3	FIMP-4
Number:	1	1	1
Power Units:	3	3	4
WEAPONS/DEFENSE			
Beam Weapon:	FPHC-3a	FPHC-3b	FPHC-4a
Firing Arcs:	1FP,1FS	1FP,1FS	1FP,1FS
Firing Chart:	I	I	H
Maximum Power:	3	3	4
Damage Modifiers			
+3			
+2	(1 - 3)	(1 - 4)	(1 - 2)
+1	(4 - 6)	(5 - 9)	(3 - 6)
Beam Weapon:	FPLC-1a	FPLC-1a	FPLC-1a
Firing Arcs:	3FP,3FS	3FP,3FS	3FP,3FS
Firing Chart:	D	D	D
Maximum Power:	1	1	1
Damage Modifiers			
+3			
+2			
+1			

Torpedo Type:	FPT-103	FPT-103	FPT-103
Firing Arcs:	2F	2F	2F
Firing Chart:	G	G	G
Power To Arm:	1	1	1
Damage:	3	3	3
Shields-			
Shield Type:	FSH1105	FSH1106	FSH1206
Shield Point Ratio:	1/1	1/1	1/2
Maximum Shield:	5	6	6
Combat Efficiency	1.7	3.8	6.4
D-	29.5	63.2	106.5
WDF-	5.8	6.0	6.0

NOTES:

Original CGI design by Tobias Richter
Re-draw by Joe Homoki www.ufc465537.scificities.com
Special thanks to Lee Wood @ Morena Shipyards, for chartless system
Special thanks to Bryan Jecko @ tacticalstarshipcombat.com and
FasaStarTrekUniverse et al. for formulas and formats
SPecial Thanks Treyards @ www.trekyards.com
Special thanks to Wikipedia Memory Alpha and Memory Beta
Version 2 - 7/6/16.

MASTER CONTROL PANEL

Race			
Vessel Class	***Star Trek Axanar Hermes Class VI Scout***	Class	**VI**
Vessel Name		Model	**MK I**
CE	***1.7***	Captain's Name	
D	***29.5***	Captain's Skill Rating	
WDF	***5.8***	Crew Efficiency Rating	

ENGINEERING DISPLAY

WARP ENGINE TRACK

Type	1	2	3	4	5	6	7	8	9	10	11	12	13	14	15										
FWDR-5																									

IMPULSE POWER TRACK

Type	1	2	3																						
FIMP-3																									

TURN TRACK

	#1	#2	#3	#4	#5	#6	#7	#8	#9	#10	#11	#12
Total Power Units Available **18**												
MPR **4/1**												
Power To Shields Shield Point Ratio **1/1**												
Power To Weapons												
Power To Cloak Power To Arm												
HELM DISPLAY Warp Speed Stress Charts **Q/O**												
Movement Points												
Sensors Status	O D L	O D L	O D L	O D L	O D L	O D L	O D L	O D L	O D L	O D L	O D L	O D L
Cloak Status	ON OFF	ON OFF	ON OFF	ON OFF	ON OFF	ON OFF	ON OFF	ON OFF	ON OFF	ON OFF	ON OFF	ON OFF

WEAPONS DISPLAY

Weapon Type	Firing Arcs	Firing Chart	Max Power	PTA	Damage	Damage Modifiers +3	+2	+1
FPHC-3a	**1FP,1FS**	**I**	**3**				**(1 - 3)**	**(4 - 6)**
FPLC-1a	**3FP,3FS**	**D**	**1**					
FPT-103	**2F**	**G**		**1**	**3**			

TURN #					#1	#2	#3	#4	#5	#6	#7	#8	#9	#10	#11	#12
Type **FPHC-3a**	OPER DMGD	REPD INOP	Firing arc **F/P**													
Type **FPHC-3a**	OPER DMGD	REPD INOP	Firing arc **F/S**													
Type	OPER DMGD	REPD INOP	Firing arc													
Type	OPER DMGD	REPD INOP	Firing arc													
Type	OPER DMGD	REPD INOP	Firing arc													
Type	OPER DMGD	REPD INOP	Firing arc													
Type	OPER DMGD	REPD INOP	Firing arc													
Type	OPER DMGD	REPD INOP	Firing arc													
Type	OPER DMGD	REPD INOP	Firing arc													
Type	OPER DMGD	REPD INOP	Firing arc													
Type	OPER DMGD	REPD INOP	Firing arc													
Type **FPLC-1a**	OPER DMGD	REPD INOP	Firing arc **F/P**													
Type **FPLC-1a**	OPER DMGD	REPD INOP	Firing arc **F/P**													
Type **FPLC-1a**	OPER DMGD	REPD INOP	Firing arc **F/P**													
Type **FPLC-1a**	OPER DMGD	REPD INOP	Firing arc **F/S**													
Type **FPLC-1a**	OPER DMGD	REPD INOP	Firing arc **F/S**													
Type **FPLC-1a**	OPER DMGD	REPD INOP	Firing arc **F/S**													
Type	OPER DMGD	REPD INOP	Firing arc													
Type	OPER DMGD	REPD INOP	Firing arc													
Type	OPER DMGD	REPD INOP	Firing arc													
Type	OPER DMGD	REPD INOP	Firing arc													
Type **FPT-103**	OPER DMGD	REPD INOP	Firing arc **F**													
Type **FPT-103**	OPER DMGD	REPD INOP	Firing arc **F**													
Type	OPER DMGD	REPD INOP	Firing arc													
Type	OPER DMGD	REPD INOP	Firing arc													
Type	OPER DMGD	REPD INOP	Firing arc													
Type	OPER DMGD	REPD INOP	Firing arc													
Type	OPER DMGD	REPD INOP	Firing arc													
Type	OPER DMGD	REPD INOP	Firing arc													
Type	OPER DMGD	REPD INOP	Firing arc													
Type	OPER DMGD	REPD INOP	Firing arc													

MASTER CONTROL PANEL

Race			
Vessel Class	***Star Trek Axanar Hermes Class VI Scout***	Class	**VII**
Vessel Name		Model	**MK II**
CE	***3.8***	Captain's Name	
D	***63.2***	Captain's Skill Rating	
WDF	***6.0***	Crew Efficiency Rating	

ENGINEERING DISPLAY

WARP ENGINE TRACK

Type	1	2	3	4	5	6	7	8	9	10	11	12	13	14	15
FWDR-6															

IMPULSE POWER TRACK

Type	1	2	3
FIMP-3			

TURN TRACK

	#1	#2	#3	#4	#5	#6	#7	#8	#9	#10	#11	#12
Total Power Units Available **18**												
MPR **3/1**												
Power To Shields Shield Point Ratio **1/1**												
Power To Weapons												
Power To Cloak Power To Arm												

HELM DISPLAY

	#1	#2	#3	#4	#5	#6	#7	#8	#9	#10	#11	#12
Warp Speed Stress Charts **P/O**												
Movement Points												
Sensors Status	O D L	O D L	O D L	O D L	O D L	O D L	O D L	O D L	O D L	O D L	O D L	O D L
Cloak Status	ON OFF	ON OFF	ON OFF	ON OFF	ON OFF	ON OFF	ON OFF	ON OFF	ON OFF	ON OFF	ON OFF	ON OFF

WEAPONS DISPLAY

Weapon Type	Firing Arcs	Firing Chart	Max Power	PTA	Damage	Damage Modifiers +3	+2	+1
FPHC-3b	**1FP,1FS**	**I**	**3**				**(1 - 4)**	**(5 - 9)**
FPLC-1a	**3FP,3FS**	**D**	**1**					
FPT-103	**2F**	**G**		**1**	**3**			

					#1	#2	#3	#4	#5	#6	#7	#8	#9	#10	#11	#12
Type	OPER	REPD	Firing arc													
FPHC-3b	DMGD	INOP	**F/P**													
Type	OPER	REPD	Firing arc													
FPHC-3b	DMGD	INOP	**F/S**													
Type	OPER	REPD	Firing arc													
	DMGD	INOP														
Type	OPER	REPD	Firing arc													
	DMGD	INOP														
Type	OPER	REPD	Firing arc													
	DMGD	INOP														
Type	OPER	REPD	Firing arc													
	DMGD	INOP														
Type	OPER	REPD	Firing arc													
	DMGD	INOP														
Type	OPER	REPD	Firing arc													
	DMGD	INOP														
Type	OPER	REPD	Firing arc													
	DMGD	INOP														
Type	OPER	REPD	Firing arc													
	DMGD	INOP														
Type	OPER	REPD	Firing arc													
	DMGD	INOP														
Type	OPER	REPD	Firing arc													
	DMGD	INOP														
Type	OPER	REPD	Firing arc													
	DMGD	INOP														
Type	OPER	REPD	Firing arc													
	DMGD	INOP														
Type	OPER	REPD	Firing arc													
	DMGD	INOP														
Type	OPER	REPD	Firing arc													
	DMGD	INOP														
Type	OPER	REPD	Firing arc													
	DMGD	INOP														
Type	OPER	REPD	Firing arc													
	DMGD	INOP														
Type	OPER	REPD	Firing arc													
	DMGD	INOP														
Type	OPER	REPD	Firing arc													
	DMGD	INOP														
Type	OPER	REPD	Firing arc													
	DMGD	INOP														
Type	OPER	REPD	Firing arc													
	DMGD	INOP														
Type	OPER	REPD	Firing arc													
	DMGD	INOP														
Type	OPER	REPD	Firing arc													
	DMGD	INOP														
Type	OPER	REPD	Firing arc													
	DMGD	INOP														
Type	OPER	REPD	Firing arc													
	DMGD	INOP														
Type	OPER	REPD	Firing arc													
	DMGD	INOP														
Type	OPER	REPD	Firing arc													
	DMGD	INOP														
Type	OPER	REPD	Firing arc													
	DMGD	INOP														
Type	OPER	REPD	Firing arc													
	DMGD	INOP														
Type	OPER	REPD	Firing arc													
	DMGD	INOP														
Type	OPER	REPD	Firing arc													
	DMGD	INOP														
Type	OPER	REPD	Firing arc													
	DMGD	INOP														

MASTER CONTROL PANEL

Race			
Vessel Class	***Star Trek Axanar Hermes Class VI Scout***	Class	**VI**
Vessel Name		Model	**MK III**
CE	***6.4***	Captain's Name	
D	***106.5***	Captain's Skill Rating	
WDF	***6.0***	Crew Efficiency Rating	

ENGINEERING DISPLAY

WARP ENGINE TRACK

Type	1	2	3	4	5	6	7	8	9	10	11	12	13	14	15
FWDR-6															

IMPULSE POWER TRACK

Type	1	2	3	4
FIMP-4				

TURN TRACK

	#1	#2	#3	#4	#5	#6	#7	#8	#9	#10	#11	#12
Total Power Units Available **18**												
MPR **3/1**												
Power To Shields Shield Point Ratio **1/2**												
Power To Weapons												
Power To Cloak Power To Arm												

HELM DISPLAY

	#1	#2	#3	#4	#5	#6	#7	#8	#9	#10	#11	#12
Warp Speed Stress Charts **P/O**												
Movement Points												
Sensors Status	O D L	O D L	O D L	O D L	O D L	O D L	O D L	O D L	O D L	O D L	O D L	O D L
Cloak Status	ON OFF	ON OFF	ON OFF	ON OFF	ON OFF	ON OFF	ON OFF	ON OFF	ON OFF	ON OFF	ON OFF	ON OFF

WEAPONS DISPLAY

Weapon Type	Firing Arcs	Firing Chart	Max Power	PTA	Damage	Damage Modifiers +3	+2	+1
FPHC-4a	**1FP,1FS**	**H**	**4**				**(1 - 2)**	**(3 - 6)**
FPLC-1a	**3FP,3FS**	**D**	**1**					
FPT-103	**2F**	**G**		**1**	**3**			

					#1	#2	#3	#4	#5	#6	#7	#8	#9	#10	#11	#12
Type	OPER	REPD	Firing arc													
FPHC-4a	DMGD	INOP	**F/P**													
Type	OPER	REPD	Firing arc													
FPHC-4a	DMGD	INOP	**F/S**													
Type	OPER	REPD	Firing arc													
	DMGD	INOP														
Type	OPER	REPD	Firing arc													
	DMGD	INOP														
Type	OPER	REPD	Firing arc													
	DMGD	INOP														
Type	OPER	REPD	Firing arc													
	DMGD	INOP														
Type	OPER	REPD	Firing arc													
	DMGD	INOP														
Type	OPER	REPD	Firing arc													
	DMGD	INOP														
Type	OPER	REPD	Firing arc													
	DMGD	INOP														
Type	OPER	REPD	Firing arc													
	DMGD	INOP														
Type	OPER	REPD	Firing arc													
	DMGD	INOP														
Type	OPER	REPD	Firing arc													
	DMGD	INOP														
Type	OPER	REPD	Firing arc													
	DMGD	INOP														
Type	OPER	REPD	Firing arc													
	DMGD	INOP														
Type	OPER	REPD	Firing arc													
	DMGD	INOP														
Type	OPER	REPD	Firing arc													
	DMGD	INOP														
Type	OPER	REPD	Firing arc													
	DMGD	INOP														
Type	OPER	REPD	Firing arc													
	DMGD	INOP														
Type	OPER	REPD	Firing arc													
	DMGD	INOP														
Type	OPER	REPD	Firing arc													
	DMGD	INOP														
Type	OPER	REPD	Firing arc													
	DMGD	INOP														
Type	OPER	REPD	Firing arc													
	DMGD	INOP														
Type	OPER	REPD	Firing arc													
	DMGD	INOP														
Type	OPER	REPD	Firing arc													
	DMGD	INOP														
Type	OPER	REPD	Firing arc													
	DMGD	INOP														
Type	OPER	REPD	Firing arc													
	DMGD	INOP														
Type	OPER	REPD	Firing arc													
	DMGD	INOP														
Type	OPER	REPD	Firing arc													
	DMGD	INOP														
Type	OPER	REPD	Firing arc													
	DMGD	INOP														
Type	OPER	REPD	Firing arc													
	DMGD	INOP														
Type	OPER	REPD	Firing arc													
	DMGD	INOP														
Type	OPER	REPD	Firing arc													
	DMGD	INOP														
Type	OPER	REPD	Firing arc													
	DMGD	INOP														
Type	OPER	REPD	Firing arc													
	DMGD	INOP														
Type	OPER	REPD	Firing arc													
	DMGD	INOP														
Type	OPER	REPD	Firing arc													
	DMGD	INOP														
Type	OPER	REPD	Firing arc													
	DMGD	INOP														
Type	OPER	REPD	Firing arc													
	DMGD	INOP														
Type	OPER	REPD	Firing arc													
	DMGD	INOP														
Type	OPER	REPD	Firing arc													
	DMGD	INOP														
Type	OPER	REPD	Firing arc													
	DMGD	INOP														
Type	OPER	REPD	Firing arc													
	DMGD	INOP														
Type	OPER	REPD	Firing arc													
	DMGD	INOP														
Type	OPER	REPD	Firing arc													
	DMGD	INOP														

DAMAGE CONTROL PANEL

Star Trek Axanar Hermes Class VI Scout ***MK I***

SHIELDS

SHIELD TYPE: **FSH1105** SHIELD POINT RATIO: **1/1** MAXIMUM SHIELD POWER: **5**

DAMAGE CHART: **C**

TURN	#1	#2	#3	#4	#5	#6	#7	#8	#9	#10	#11	#12
Shield Points Available												

TURN #1

F/P #1	FWD #2	F/S #3	S/A #4	AFT #5	P/A #6
1 1 1	1 1 1	1 1 1	1 1 1	1 1 1	1 1 1
2 2 2	2 2 2	2 2 2	2 2 2	2 2 2	2 2 2
3 3 3	3 3 3	3 3 3	3 3 3	3 3 3	3 3 3
4 4 4	4 4 4	4 4 4	4 4 4	4 4 4	4 4 4
5 5 5	5 5 5	5 5 5	5 5 5	5 5 5	5 5 5

TURN #2

F/P #1	FWD #2	F/S #3	S/A #4	AFT #5	P/A #6
1 1 1	1 1 1	1 1 1	1 1 1	1 1 1	1 1 1
2 2 2	2 2 2	2 2 2	2 2 2	2 2 2	2 2 2
3 3 3	3 3 3	3 3 3	3 3 3	3 3 3	3 3 3
4 4 4	4 4 4	4 4 4	4 4 4	4 4 4	4 4 4
5 5 5	5 5 5	5 5 5	5 5 5	5 5 5	5 5 5

TURN #3

F/P #1	FWD #2	F/S #3	S/A #4	AFT #5	P/A #6
1 1 1	1 1 1	1 1 1	1 1 1	1 1 1	1 1 1
2 2 2	2 2 2	2 2 2	2 2 2	2 2 2	2 2 2
3 3 3	3 3 3	3 3 3	3 3 3	3 3 3	3 3 3
4 4 4	4 4 4	4 4 4	4 4 4	4 4 4	4 4 4
5 5 5	5 5 5	5 5 5	5 5 5	5 5 5	5 5 5

TURN #4

F/P #1	FWD #2	F/S #3	S/A #4	AFT #5	P/A #6
1 1 1	1 1 1	1 1 1	1 1 1	1 1 1	1 1 1
2 2 2	2 2 2	2 2 2	2 2 2	2 2 2	2 2 2
3 3 3	3 3 3	3 3 3	3 3 3	3 3 3	3 3 3
4 4 4	4 4 4	4 4 4	4 4 4	4 4 4	4 4 4
5 5 5	5 5 5	5 5 5	5 5 5	5 5 5	5 5 5

TURN #5

F/P #1	FWD #2	F/S #3	S/A #4	AFT #5	P/A #6
1 1 1	1 1 1	1 1 1	1 1 1	1 1 1	1 1 1
2 2 2	2 2 2	2 2 2	2 2 2	2 2 2	2 2 2
3 3 3	3 3 3	3 3 3	3 3 3	3 3 3	3 3 3
4 4 4	4 4 4	4 4 4	4 4 4	4 4 4	4 4 4
5 5 5	5 5 5	5 5 5	5 5 5	5 5 5	5 5 5

TURN #6

F/P #1	FWD #2	F/S #3	S/A #4	AFT #5	P/A #6
1 1 1	1 1 1	1 1 1	1 1 1	1 1 1	1 1 1
2 2 2	2 2 2	2 2 2	2 2 2	2 2 2	2 2 2
3 3 3	3 3 3	3 3 3	3 3 3	3 3 3	3 3 3
4 4 4	4 4 4	4 4 4	4 4 4	4 4 4	4 4 4
5 5 5	5 5 5	5 5 5	5 5 5	5 5 5	5 5 5

TURN #7

F/P #1	FWD #2	F/S #3	S/A #4	AFT #5	P/A #6
1 1 1	1 1 1	1 1 1	1 1 1	1 1 1	1 1 1
2 2 2	2 2 2	2 2 2	2 2 2	2 2 2	2 2 2
3 3 3	3 3 3	3 3 3	3 3 3	3 3 3	3 3 3
4 4 4	4 4 4	4 4 4	4 4 4	4 4 4	4 4 4
5 5 5	5 5 5	5 5 5	5 5 5	5 5 5	5 5 5

TURN #8

F/P #1	FWD #2	F/S #3	S/A #4	AFT #5	P/A #6
1 1 1	1 1 1	1 1 1	1 1 1	1 1 1	1 1 1
2 2 2	2 2 2	2 2 2	2 2 2	2 2 2	2 2 2
3 3 3	3 3 3	3 3 3	3 3 3	3 3 3	3 3 3
4 4 4	4 4 4	4 4 4	4 4 4	4 4 4	4 4 4
5 5 5	5 5 5	5 5 5	5 5 5	5 5 5	5 5 5

TURN #9

F/P #1	FWD #2	F/S #3	S/A #4	AFT #5	P/A #6
1 1 1	1 1 1	1 1 1	1 1 1	1 1 1	1 1 1
2 2 2	2 2 2	2 2 2	2 2 2	2 2 2	2 2 2
3 3 3	3 3 3	3 3 3	3 3 3	3 3 3	3 3 3
4 4 4	4 4 4	4 4 4	4 4 4	4 4 4	4 4 4
5 5 5	5 5 5	5 5 5	5 5 5	5 5 5	5 5 5

TURN #10

F/P #1	FWD #2	F/S #3	S/A #4	AFT #5	P/A #6
1 1 1	1 1 1	1 1 1	1 1 1	1 1 1	1 1 1
2 2 2	2 2 2	2 2 2	2 2 2	2 2 2	2 2 2
3 3 3	3 3 3	3 3 3	3 3 3	3 3 3	3 3 3
4 4 4	4 4 4	4 4 4	4 4 4	4 4 4	4 4 4
5 5 5	5 5 5	5 5 5	5 5 5	5 5 5	5 5 5

TURN #11

F/P #1	FWD #2	F/S #3	S/A #4	AFT #5	P/A #6
1 1 1	1 1 1	1 1 1	1 1 1	1 1 1	1 1 1
2 2 2	2 2 2	2 2 2	2 2 2	2 2 2	2 2 2
3 3 3	3 3 3	3 3 3	3 3 3	3 3 3	3 3 3
4 4 4	4 4 4	4 4 4	4 4 4	4 4 4	4 4 4
5 5 5	5 5 5	5 5 5	5 5 5	5 5 5	5 5 5

TURN #12

F/P #1	FWD #2	F/S #3	S/A #4	AFT #5	P/A #6
1 1 1	1 1 1	1 1 1	1 1 1	1 1 1	1 1 1
2 2 2	2 2 2	2 2 2	2 2 2	2 2 2	2 2 2
3 3 3	3 3 3	3 3 3	3 3 3	3 3 3	3 3 3
4 4 4	4 4 4	4 4 4	4 4 4	4 4 4	4 4 4
5 5 5	5 5 5	5 5 5	5 5 5	5 5 5	5 5 5

DAMAGE POINT RECORD

TURN	#1	#2	#3	#4
	#5	#6	#7	#8
	#9	#10	#11	#12

SYSTEMS REPAIR STATUS

HITS	1ST 1-8	2ND 1-6	3RD 1-4	4TH 1-2	5TH OUT
SENSORS					
SHIELD #1					
#2					
#3					
#4					
#5					
#6					
ENGINEERING GRIDS SHIELDS					
WEAPONS					
MANEUVER					

SUPERSTRUCTURE DAMAGE TRACK

1	2	3	4	5	6	7	8	9	10	11		

CASUALTY MODIFIER TRACK

0-19% 0	20-39% -1 -10%	40-59% -2 -20%	60-69% -5 -50%	70% + NO FIRING

CREW: **111**

PERCENT CASUALTIES TRACK

1	2	3	4	5	6	7	8	9	10	11	12	13
14	15	16	17	18	19	20	21	22	23	24	25	26
27	28	29	30	31	32	33	34	35	36	37	38	39
40	41	42	43	44	45	46	47	48	49	50	51	52
53	54	55	56	57	58	59	60	61	62	63	64	65
66	67	68	69	70	71	72	73	74	75	76	77	78
79	80	81	82	83	84	85	86	87	88	89	90	91
92	93	94	95	96	97	98	99	00				

DAMAGE CONTROL PANEL

Star Trek Axanar Hermes Class VI Scout ***MK II***

SHIELDS

SHIELD TYPE: **FSH1106** SHIELD POINT RATIO: **1/1** MAXIMUM SHIELD POWER: **6**

DAMAGE CHART: **C**

TURN	#1	#2	#3	#4	#5	#6	#7	#8	#9	#10	#11	#12
Shield Points Available												

TURN #1 AFT

F/P #1	FWD #2	F/S #3	S/A #4	AFT #5	P/A #6
1 1 1	1 1 1	1 1 1	1 1 1	1 1 1	1 1 1
2 2 2	2 2 2	2 2 2	2 2 2	2 2 2	2 2 2
3 3 3	3 3 3	3 3 3	3 3 3	3 3 3	3 3 3
4 4 4	4 4 4	4 4 4	4 4 4	4 4 4	4 4 4
5 5 5	5 5 5	5 5 5	5 5 5	5 5 5	5 5 5
6 6 6	6 6 6	6 6 6	6 6 6	6 6 6	6 6 6

TURN #2

F/P #1	FWD #2	F/S #3	S/A #4	AFT #5	P/A #6
1 1 1	1 1 1	1 1 1	1 1 1	1 1 1	1 1 1
2 2 2	2 2 2	2 2 2	2 2 2	2 2 2	2 2 2
3 3 3	3 3 3	3 3 3	3 3 3	3 3 3	3 3 3
4 4 4	4 4 4	4 4 4	4 4 4	4 4 4	4 4 4
5 5 5	5 5 5	5 5 5	5 5 5	5 5 5	5 5 5
6 6 6	6 6 6	6 6 6	6 6 6	6 6 6	6 6 6

TURN #3

F/P #1	FWD #2	F/S #3	S/A #4	AFT #5	P/A #6
1 1 1	1 1 1	1 1 1	1 1 1	1 1 1	1 1 1
2 2 2	2 2 2	2 2 2	2 2 2	2 2 2	2 2 2
3 3 3	3 3 3	3 3 3	3 3 3	3 3 3	3 3 3
4 4 4	4 4 4	4 4 4	4 4 4	4 4 4	4 4 4
5 5 5	5 5 5	5 5 5	5 5 5	5 5 5	5 5 5
6 6 6	6 6 6	6 6 6	6 6 6	6 6 6	6 6 6

TURN #4

F/P #1	FWD #2	F/S #3	S/A #4	AFT #5	P/A #6
1 1 1	1 1 1	1 1 1	1 1 1	1 1 1	1 1 1
2 2 2	2 2 2	2 2 2	2 2 2	2 2 2	2 2 2
3 3 3	3 3 3	3 3 3	3 3 3	3 3 3	3 3 3
4 4 4	4 4 4	4 4 4	4 4 4	4 4 4	4 4 4
5 5 5	5 5 5	5 5 5	5 5 5	5 5 5	5 5 5
6 6 6	6 6 6	6 6 6	6 6 6	6 6 6	6 6 6

TURN #5

F/P #1	FWD #2	F/S #3	S/A #4	AFT #5	P/A #6
1 1 1	1 1 1	1 1 1	1 1 1	1 1 1	1 1 1
2 2 2	2 2 2	2 2 2	2 2 2	2 2 2	2 2 2
3 3 3	3 3 3	3 3 3	3 3 3	3 3 3	3 3 3
4 4 4	4 4 4	4 4 4	4 4 4	4 4 4	4 4 4
5 5 5	5 5 5	5 5 5	5 5 5	5 5 5	5 5 5
6 6 6	6 6 6	6 6 6	6 6 6	6 6 6	6 6 6

TURN #6

F/P #1	FWD #2	F/S #3	S/A #4	AFT #5	P/A #6
1 1 1	1 1 1	1 1 1	1 1 1	1 1 1	1 1 1
2 2 2	2 2 2	2 2 2	2 2 2	2 2 2	2 2 2
3 3 3	3 3 3	3 3 3	3 3 3	3 3 3	3 3 3
4 4 4	4 4 4	4 4 4	4 4 4	4 4 4	4 4 4
5 5 5	5 5 5	5 5 5	5 5 5	5 5 5	5 5 5
6 6 6	6 6 6	6 6 6	6 6 6	6 6 6	6 6 6

TURN #7

F/P #1	FWD #2	F/S #3	S/A #4	AFT #5	P/A #6
1 1 1	1 1 1	1 1 1	1 1 1	1 1 1	1 1 1
2 2 2	2 2 2	2 2 2	2 2 2	2 2 2	2 2 2
3 3 3	3 3 3	3 3 3	3 3 3	3 3 3	3 3 3
4 4 4	4 4 4	4 4 4	4 4 4	4 4 4	4 4 4
5 5 5	5 5 5	5 5 5	5 5 5	5 5 5	5 5 5
6 6 6	6 6 6	6 6 6	6 6 6	6 6 6	6 6 6

TURN #8

F/P #1	FWD #2	F/S #3	S/A #4	AFT #5	P/A #6
1 1 1	1 1 1	1 1 1	1 1 1	1 1 1	1 1 1
2 2 2	2 2 2	2 2 2	2 2 2	2 2 2	2 2 2
3 3 3	3 3 3	3 3 3	3 3 3	3 3 3	3 3 3
4 4 4	4 4 4	4 4 4	4 4 4	4 4 4	4 4 4
5 5 5	5 5 5	5 5 5	5 5 5	5 5 5	5 5 5
6 6 6	6 6 6	6 6 6	6 6 6	6 6 6	6 6 6

TURN #9

F/P #1	FWD #2	F/S #3	S/A #4	AFT #5	P/A #6
1 1 1	1 1 1	1 1 1	1 1 1	1 1 1	1 1 1
2 2 2	2 2 2	2 2 2	2 2 2	2 2 2	2 2 2
3 3 3	3 3 3	3 3 3	3 3 3	3 3 3	3 3 3
4 4 4	4 4 4	4 4 4	4 4 4	4 4 4	4 4 4
5 5 5	5 5 5	5 5 5	5 5 5	5 5 5	5 5 5
6 6 6	6 6 6	6 6 6	6 6 6	6 6 6	6 6 6

TURN #10

F/P #1	FWD #2	F/S #3	S/A #4	AFT #5	P/A #6
1 1 1	1 1 1	1 1 1	1 1 1	1 1 1	1 1 1
2 2 2	2 2 2	2 2 2	2 2 2	2 2 2	2 2 2
3 3 3	3 3 3	3 3 3	3 3 3	3 3 3	3 3 3
4 4 4	4 4 4	4 4 4	4 4 4	4 4 4	4 4 4
5 5 5	5 5 5	5 5 5	5 5 5	5 5 5	5 5 5
6 6 6	6 6 6	6 6 6	6 6 6	6 6 6	6 6 6

TURN #11

F/P #1	FWD #2	F/S #3	S/A #4	AFT #5	P/A #6
1 1 1	1 1 1	1 1 1	1 1 1	1 1 1	1 1 1
2 2 2	2 2 2	2 2 2	2 2 2	2 2 2	2 2 2
3 3 3	3 3 3	3 3 3	3 3 3	3 3 3	3 3 3
4 4 4	4 4 4	4 4 4	4 4 4	4 4 4	4 4 4
5 5 5	5 5 5	5 5 5	5 5 5	5 5 5	5 5 5
6 6 6	6 6 6	6 6 6	6 6 6	6 6 6	6 6 6

TURN #12

F/P #1	FWD #2	F/S #3	S/A #4	AFT #5	P/A #6
1 1 1	1 1 1	1 1 1	1 1 1	1 1 1	1 1 1
2 2 2	2 2 2	2 2 2	2 2 2	2 2 2	2 2 2
3 3 3	3 3 3	3 3 3	3 3 3	3 3 3	3 3 3
4 4 4	4 4 4	4 4 4	4 4 4	4 4 4	4 4 4
5 5 5	5 5 5	5 5 5	5 5 5	5 5 5	5 5 5
6 6 6	6 6 6	6 6 6	6 6 6	6 6 6	6 6 6

DAMAGE POINT RECORD

TURN	#1	#2	#3	#4
	#5	#6	#7	#8
	#9	#10	#11	#12

SYSTEMS REPAIR STATUS

HITS	1ST 1-8	2ND 1-6	3RD 1-4	4TH 1-2	5TH OUT
SENSORS					
SHIELD #1					
#2					
#3					
#4					
#5					
#6					
ENGINEERING GRIDS SHIELDS					
WEAPONS					
MANEUVER					

SUPERSTRUCTURE DAMAGE TRACK

1	2	3	4	5	6	7	8	9	10	11		

CASUALTY MODIFIER TRACK

0-19% 0	20-39% -1 -10%	40-59% -2 -20%	60-69% -5 -50%	70% + NO FIRING

CREW: **112**

PERCENT CASUALTIES TRACK

1	2	3	4	5	6	7	8	9	10	11	12	13
14	15	16	17	18	19	20	21	22	23	24	25	26
27	28	29	30	31	32	33	34	35	36	37	38	39
40	41	42	43	44	45	46	47	48	49	50	51	52
53	54	55	56	57	58	59	60	61	62	63	64	65
66	67	68	69	70	71	72	73	74	75	76	77	78
79	80	81	82	83	84	85	86	87	88	89	90	91
92	93	94	95	96	97	98	99	00				

DAMAGE CONTROL PANEL

Star Trek Axanar Hermes Class VI Scout ***MK III***

SHIELDS

SHIELD TYPE: **FSH1206** SHIELD POINT RATIO: **1/2** MAXIMUM SHIELD POWER: **6**

DAMAGE CHART: **C**

TURN	#1	#2	#3	#4	#5	#6	#7	#8	#9	#10	#11	#12
Shield Points Available												

TURN #1 AFT

F/P #1	FWD #2	F/S #3	S/A #4	AFT #5	P/A #6
1 1 1	1 1 1	1 1 1	1 1 1	1 1 1	1 1 1
2 2 2	2 2 2	2 2 2	2 2 2	2 2 2	2 2 2
3 3 3	3 3 3	3 3 3	3 3 3	3 3 3	3 3 3
4 4 4	4 4 4	4 4 4	4 4 4	4 4 4	4 4 4
5 5 5	5 5 5	5 5 5	5 5 5	5 5 5	5 5 5
6 6 6	6 6 6	6 6 6	6 6 6	6 6 6	6 6 6

TURN #2

F/P #1	FWD #2	F/S #3	S/A #4	AFT #5	P/A #6
1 1 1	1 1 1	1 1 1	1 1 1	1 1 1	1 1 1
2 2 2	2 2 2	2 2 2	2 2 2	2 2 2	2 2 2
3 3 3	3 3 3	3 3 3	3 3 3	3 3 3	3 3 3
4 4 4	4 4 4	4 4 4	4 4 4	4 4 4	4 4 4
5 5 5	5 5 5	5 5 5	5 5 5	5 5 5	5 5 5
6 6 6	6 6 6	6 6 6	6 6 6	6 6 6	6 6 6

TURN #3

F/P #1	FWD #2	F/S #3	S/A #4	AFT #5	P/A #6
1 1 1	1 1 1	1 1 1	1 1 1	1 1 1	1 1 1
2 2 2	2 2 2	2 2 2	2 2 2	2 2 2	2 2 2
3 3 3	3 3 3	3 3 3	3 3 3	3 3 3	3 3 3
4 4 4	4 4 4	4 4 4	4 4 4	4 4 4	4 4 4
5 5 5	5 5 5	5 5 5	5 5 5	5 5 5	5 5 5
6 6 6	6 6 6	6 6 6	6 6 6	6 6 6	6 6 6

TURN #4

F/P #1	FWD #2	F/S #3	S/A #4	AFT #5	P/A #6
1 1 1	1 1 1	1 1 1	1 1 1	1 1 1	1 1 1
2 2 2	2 2 2	2 2 2	2 2 2	2 2 2	2 2 2
3 3 3	3 3 3	3 3 3	3 3 3	3 3 3	3 3 3
4 4 4	4 4 4	4 4 4	4 4 4	4 4 4	4 4 4
5 5 5	5 5 5	5 5 5	5 5 5	5 5 5	5 5 5
6 6 6	6 6 6	6 6 6	6 6 6	6 6 6	6 6 6

TURN #5

F/P #1	FWD #2	F/S #3	S/A #4	AFT #5	P/A #6
1 1 1	1 1 1	1 1 1	1 1 1	1 1 1	1 1 1
2 2 2	2 2 2	2 2 2	2 2 2	2 2 2	2 2 2
3 3 3	3 3 3	3 3 3	3 3 3	3 3 3	3 3 3
4 4 4	4 4 4	4 4 4	4 4 4	4 4 4	4 4 4
5 5 5	5 5 5	5 5 5	5 5 5	5 5 5	5 5 5
6 6 6	6 6 6	6 6 6	6 6 6	6 6 6	6 6 6

TURN #6

F/P #1	FWD #2	F/S #3	S/A #4	AFT #5	P/A #6
1 1 1	1 1 1	1 1 1	1 1 1	1 1 1	1 1 1
2 2 2	2 2 2	2 2 2	2 2 2	2 2 2	2 2 2
3 3 3	3 3 3	3 3 3	3 3 3	3 3 3	3 3 3
4 4 4	4 4 4	4 4 4	4 4 4	4 4 4	4 4 4
5 5 5	5 5 5	5 5 5	5 5 5	5 5 5	5 5 5
6 6 6	6 6 6	6 6 6	6 6 6	6 6 6	6 6 6

TURN #7

F/P #1	FWD #2	F/S #3	S/A #4	AFT #5	P/A #6
1 1 1	1 1 1	1 1 1	1 1 1	1 1 1	1 1 1
2 2 2	2 2 2	2 2 2	2 2 2	2 2 2	2 2 2
3 3 3	3 3 3	3 3 3	3 3 3	3 3 3	3 3 3
4 4 4	4 4 4	4 4 4	4 4 4	4 4 4	4 4 4
5 5 5	5 5 5	5 5 5	5 5 5	5 5 5	5 5 5
6 6 6	6 6 6	6 6 6	6 6 6	6 6 6	6 6 6

TURN #8

F/P #1	FWD #2	F/S #3	S/A #4	AFT #5	P/A #6
1 1 1	1 1 1	1 1 1	1 1 1	1 1 1	1 1 1
2 2 2	2 2 2	2 2 2	2 2 2	2 2 2	2 2 2
3 3 3	3 3 3	3 3 3	3 3 3	3 3 3	3 3 3
4 4 4	4 4 4	4 4 4	4 4 4	4 4 4	4 4 4
5 5 5	5 5 5	5 5 5	5 5 5	5 5 5	5 5 5
6 6 6	6 6 6	6 6 6	6 6 6	6 6 6	6 6 6

TURN #9

F/P #1	FWD #2	F/S #3	S/A #4	AFT #5	P/A #6
1 1 1	1 1 1	1 1 1	1 1 1	1 1 1	1 1 1
2 2 2	2 2 2	2 2 2	2 2 2	2 2 2	2 2 2
3 3 3	3 3 3	3 3 3	3 3 3	3 3 3	3 3 3
4 4 4	4 4 4	4 4 4	4 4 4	4 4 4	4 4 4
5 5 5	5 5 5	5 5 5	5 5 5	5 5 5	5 5 5
6 6 6	6 6 6	6 6 6	6 6 6	6 6 6	6 6 6

TURN #10

F/P #1	FWD #2	F/S #3	S/A #4	AFT #5	P/A #6
1 1 1	1 1 1	1 1 1	1 1 1	1 1 1	1 1 1
2 2 2	2 2 2	2 2 2	2 2 2	2 2 2	2 2 2
3 3 3	3 3 3	3 3 3	3 3 3	3 3 3	3 3 3
4 4 4	4 4 4	4 4 4	4 4 4	4 4 4	4 4 4
5 5 5	5 5 5	5 5 5	5 5 5	5 5 5	5 5 5
6 6 6	6 6 6	6 6 6	6 6 6	6 6 6	6 6 6

TURN #11

F/P #1	FWD #2	F/S #3	S/A #4	AFT #5	P/A #6
1 1 1	1 1 1	1 1 1	1 1 1	1 1 1	1 1 1
2 2 2	2 2 2	2 2 2	2 2 2	2 2 2	2 2 2
3 3 3	3 3 3	3 3 3	3 3 3	3 3 3	3 3 3
4 4 4	4 4 4	4 4 4	4 4 4	4 4 4	4 4 4
5 5 5	5 5 5	5 5 5	5 5 5	5 5 5	5 5 5
6 6 6	6 6 6	6 6 6	6 6 6	6 6 6	6 6 6

TURN #12

F/P #1	FWD #2	F/S #3	S/A #4	AFT #5	P/A #6
1 1 1	1 1 1	1 1 1	1 1 1	1 1 1	1 1 1
2 2 2	2 2 2	2 2 2	2 2 2	2 2 2	2 2 2
3 3 3	3 3 3	3 3 3	3 3 3	3 3 3	3 3 3
4 4 4	4 4 4	4 4 4	4 4 4	4 4 4	4 4 4
5 5 5	5 5 5	5 5 5	5 5 5	5 5 5	5 5 5
6 6 6	6 6 6	6 6 6	6 6 6	6 6 6	6 6 6

DAMAGE POINT RECORD

TURN	#1	#2	#3	#4
	#5	#6	#7	#8
	#9	#10	#11	#12

SYSTEMS REPAIR STATUS

HITS	1ST 1-8	2ND 1-6	3RD 1-4	4TH 1-2	5TH OUT
SENSORS					
SHIELD #1					
#2					
#3					
#4					
#5					
#6					
ENGINEERING GRIDS					
SHIELDS					
WEAPONS					
MANEUVER					

SUPERSTRUCTURE DAMAGE TRACK

1	2	3	4	5	6	7	8	9	10	11		

CASUALTY MODIFIER TRACK

0-19% 0	20-39% -1 -10%	40-59% -2 -20%	60-69% -5 -50%	70% + NO FIRING

CREW: **114**

PERCENT CASUALTIES TRACK

1	2	3	4	5	6	7	8	9	10	11	12	13
14	15	16	17	18	19	20	21	22	23	24	25	26
27	28	29	30	31	32	33	34	35	36	37	38	39
40	41	42	43	44	45	46	47	48	49	50	51	52
53	54	55	56	57	58	59	60	61	62	63	64	65
66	67	68	69	70	71	72	73	74	75	76	77	78
79	80	81	82	83	84	85	86	87	88	89	90	91
92	93	94	95	96	97	98	99	00				